macchine editi ed agricole

dDIECI

Agri Farmer 30.9

Agri Farmer 30.9

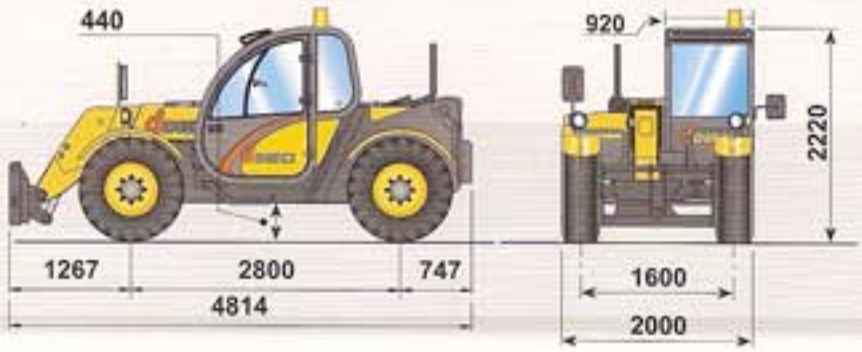

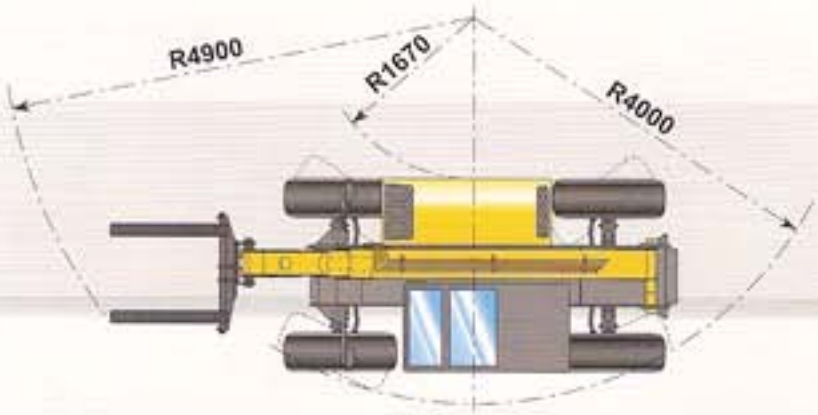

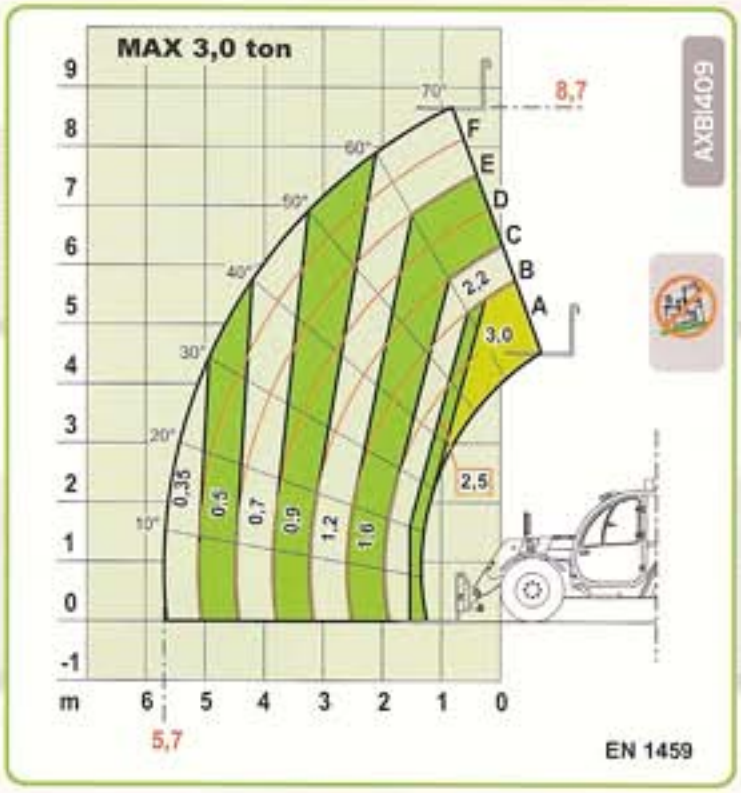

PERFORMANCES

Maximum capacity:..... 3.000 kg
Capacity at maximum height on tyres:..... 1.200 kg
Maximum capacity boom on tyres:..... 350 kg
Maximum lifting height on tyres:..... 8,70 m
Maximum horizontal boom extension:..... 5,70 m
Boom at maximum height:..... 0,80 m
Angle of fork arching:..... 130°
Tearing force:..... 5.700 daN
Towing force:..... 7.300 daN
Maximum slope for overtaking:..... 40 %
Total empty weight:..... 6.150 kg
Max speed:..... 35 km/h

TRANSMISSION

Transmission:..... hydrostatic with variable capacity pump
Hydraulic engine:..... with automatic change
Gear reversing:..... electro - hydraulic
Inching pedal for controlled forward movement.
2 speed power steering.

HYDRAULIC CIRCUIT

Gear pump with capacity at speed:..... 88 lt/1'
Max working pressure:..... 230 bar
Distributor controls with joystick:..... 3 in 1

DIFFERENTIAL AXLES

Steering axles:..... 2, with epicycloidal reduction gears
Type of steering:..... 4 wheels / transversal / 2 wheels
Front axle:..... rigid
Rear axle:..... oscillating
Service braking:..... oil bath on the front axle
Parking brake:..... actuated negatively

OPTIONAL AND ACCESSORIES

Optional and Accessories:..... see the relevant catalogue

ENGINE

ENGINE IVECO NEF F4GE0454A - TC - 74 kW
Maximum power:..... 74 kW (102 hp) at 2300 rpm
Operating:..... four-stroke engine, diesel
Cylinders number and layout:..... 4, vertical in line
Displacement:..... 4485 cm^3 - Turbo compressor
Cooling system:..... liquid

REFUELLING (litre)

Hydraulic circuit:..... 130
Fuel tank:..... 60

STANDARD DEVICES

Anti-tipping device with block for hazardous movements.
Closed soundproof homologated cab ROPS - FOPS, with heating.
Hydraulic socket for possible accessories on boom head.
Front self-locking axle (limited slip 45%).

TYRES

Tyres:..... 16/70x20"

TOWING CAPACITY (on request)

Unbraked trailer:..... 3 ton
Mechanical braking:..... 5 ton
Hydraulic/pneumatic brake:..... 17 ton

The information contained in the present publication are only intended as an indication; the models described may be modified, without notice, by the manufacturer; drawings and photographs may refer to optional equipment or to particular specifications for other countries. For any further information, please contact DIECI headquarters at the address given below.

macchine edili ed agricole
DIECI
DIECI S.r.l.
Via E. Majorana, 2-4 - 42027 Montecchio Emilia (RE)
Tel. +39 0522 869611 - Fax +39 0522 869744
www.dieci.com - mailbox@dieci.com

(Cod. AXE3134/UK - 10/2007 v0)